DREO | Air Circulator Fan
CF315

USER MANUAL

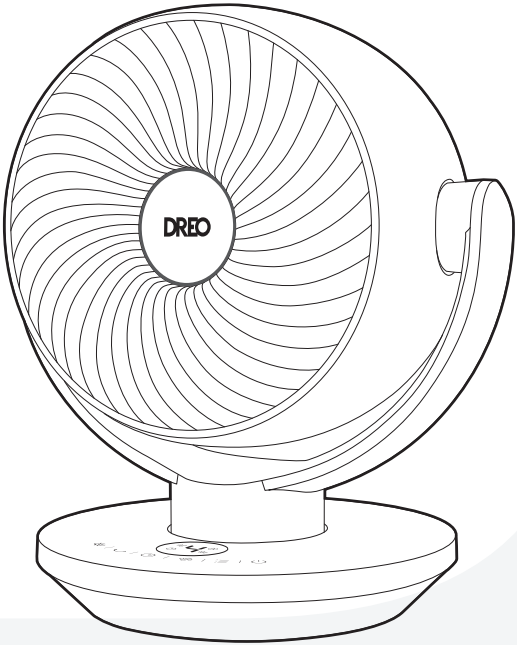

www.dreo.com

Looking for help?

Contact us to get expert support.

support@dreo.com (888) 290-1688 www.dreo.com
Mon - Fri, 9:00 am-5:00 pm PST/PDT

Thanks for Choosing DREO!

Your support means the world to us.
We hope you enjoy our product as
much as we did creating it.

CONTENTS

01
IMPORTANT SAFETY INSTRUCTIONS
1-2

02
KNOWING YOUR AIR CIRCULATOR FAN
3-5

03
USING YOUR AIR CIRCULATOR FAN
6-10

04
CLEANING AND MAINTENANCE
11-14

05
TROUBLESHOOTING
15

06
DREO CUSTOMER CARE
16-18

IMPORTANT SAFETY INSTRUCTIONS

01

READ ALL CAUTIONARY MARKINGS ON THE APPLIANCE AND SAFETY INSTRUCTIONS IN THE USER MANUAL BEFORE USE.



Do not cover the air inlet and outlet while in operation.



Do not use the air circulator near flammables and combustibles.

General Safety

1. Children shall not play with the appliance. Cleaning and maintenance shall not be performed by children without supervision.
2. Use the appliance as described in the user manual only. Any other use not recommended in the user manual may cause fire, electriccal shock, or personal injury.
3. This appliance can be used by children aged above 8 years and persons with reduced physical, sensory or mental capabilities or lack of experience and knowledge if they have been given supervision or instruction concerning use of this appliance in a safe way and understand the hazards involved.

Operation Safety

1. Place the appliance on a flat, dry surface before use.
2. **Do not** immerse in water and any other liquids.
3. **Do not** use the appliance until the base is installed.
4. **Do not** insert your fingers, pencil and any other objects into the grilles iunder any circumstances.
5. **Do not** dismantle, repair, or modify. All servicing should be performed by qualified personnel.
6. **Do not** operate the unit close to the curtain. Do not hang foreign objects on the grille to prevent damaging the balance of the fan or rotational structure
7. **Do not** operate the fan under overly humid, high-temperature,dusty environment or the place where acid or alkali is stored.
8. Fans should never blow directly on infant, the elderly and patients for a long time.

Electricity Safety

WARNING:

1. Make sure that the voltage of your electricity supply is the same as that indicated on the appliance.
2. Always unplug before cleaning or leaving the appliance unused for a long period of time. Keep your hands dry when plugging/unplugging.
3. Do not operate any air circulator with a damaged cord or plug. Discard air circulator or return to an authorized service facility for examination and/or repair.
4. Do not run cord under carpeting. Do not cover cord with throw rugs, runners, or similar coverings. Do not route cord under furniture or appliances. Arrange cord away from traffic area and where it will not be tripped over.
5. **WARNING:** To reduce the risk of fire or electric shock, do not use this air circulator with any solid-state speed control device .
6. This appliance employs overload protection (fuse). A blown fuse indicates an overload or short-circuit situation. If the fuse blows, unplug the product from the outlet. Replace the fuse as per the user servicing instructions and check the appliance. If the replacement fuse blows, a short-circuit may be present and the appliance should be discarded or returned to an authorized service facility for examination and/or repair.
7. This appliance has a polarized plug (one blade is wider than the other). To reduce the risk of electric shock, this plug is intended to fit ina polarized outlet only one way, If the plug does not fit fully in the outlet, reverse the plug. If it still does not fit, contact a qualified electrician. Do not attempt to defeat this safety feature.
   WARNING: To reduce the risk of fire, electric shock or injury persons, do not use replacement parts that have not been recommended by the manufacturer (e.g. Parts made at home using a 3D printer).

FOR HOUSEHOLD USE ONLY
READ AND SAVE THESE INSTRUCTIONS

Gentle Reminder:



Check the appliance regularly and refer to TROUBLESHOOTING or contact our customer support if it shows any of the following signs:

- Power cord or plug is damaged.
- Loud noise, unusual smell or excessive heat.

Specifications

Model No.	DR-HAF005
Input	AC 120V 60Hz
Rated Power	44W
Battery Type	CR2025 3V

KNOWING YOUR AIR CIRCULATOR FAN

02

Package Contents

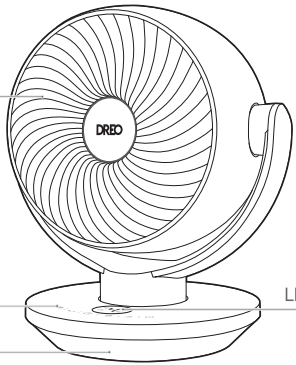

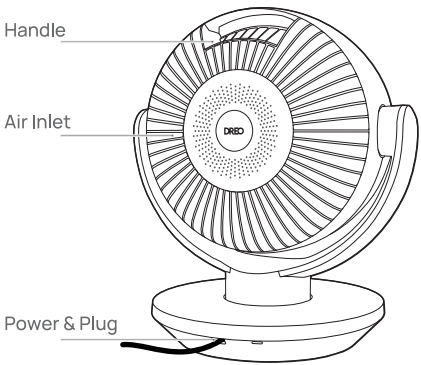

User Manual

Quick Start Guide



Remote Control (Battery Included)

Control Panel



Power Button
- Turn power on/off
- Long press 10 seconds to reset to factory settings



Mode Button
- Switch between Normal/Auto Mode



Fan Speed Button
- Adjust airflow speed (1-4 levels)



Timer Button
- Select to set a timer (0-8h)



Oscillation Button
- Adjust airflow direction (90°)



Mute Button
- Turn on/off the button sounds

LED Display

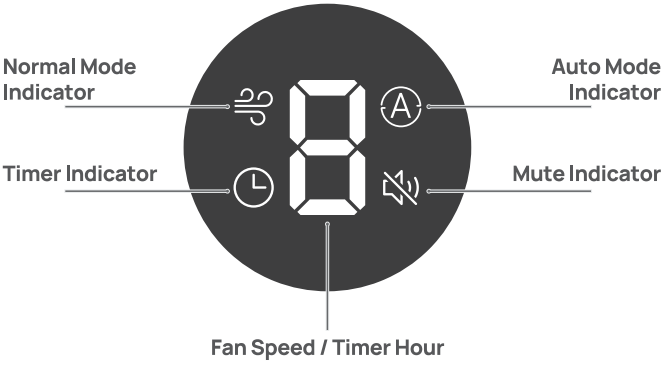
Normal Mode Indicator
Auto Mode Indicator
Timer Indicator
Mute Indicator
Fan Speed / Timer Hour

USING YOUR AIR CIRCULATOR FAN

03

Getting the Most out of Your Air Circulator Fan

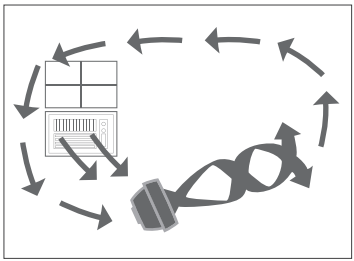

Summer:

Use with Air Conditioner

Position the air circulator in front of your AC to circulate cold air and provide better cooling.

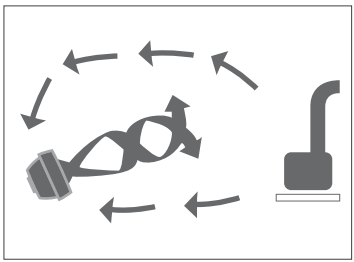

Winter:

Use with Heater

Send the heat to corner of the room and circulate warm air faster.

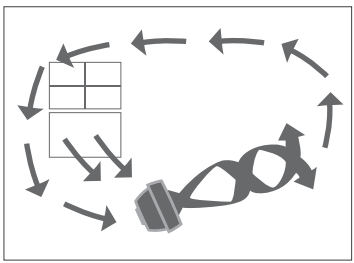

Spring & Fall:

Circulation

Make the indoors as fresh and pleasant as the outdoors

General Operations

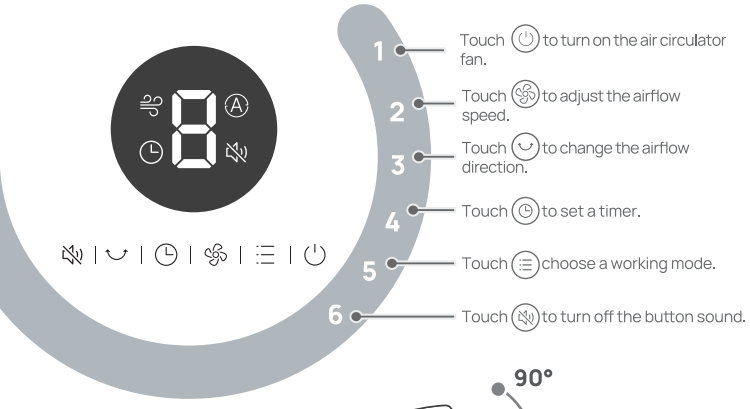

Tilt the fan head by hand to the desired angle.

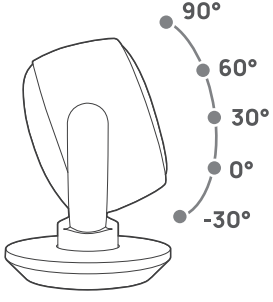

Working Modes

Normal Mode
Fan runs at the fixed speed.

Auto Mode
Fan speed adapts to the ambient temperature.

Additional Features



Timer

When the fan is ON/OFF, touch the timer button repeatedly to set a timer from 1 to 8 hours. When the timer ends, the fan will stop/start running automatically. To cancel, set the time to 0 hour.

Note: *When the auto off timer is enabled, display will return to fan speed after 3 seconds.*



Child Lock

Long press the Oscillation button and Timer button at the same time for 3 seconds to turn on/off Child Lock. "L" will flash on the display when turned on/off.

Note: *Child Lock doesn't apply to the remote control. You can also turn off Child Lock by re-plugging in.*



Memory

If the fan is turned OFF or disconnected from power, it will operate under the previous settings (except the timer setting) when it is turned ON again.



Countdown Display

When long pressing buttons for Factory Reset, Child Lock, and Mute, a countdown will show on the display accordingly.



Display Auto Off

Display turns off after 1 minute.
Wake up the display by long-pressing any button.

Remote Control

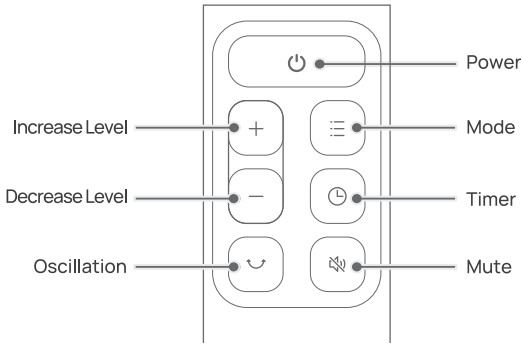

Battery Replacement

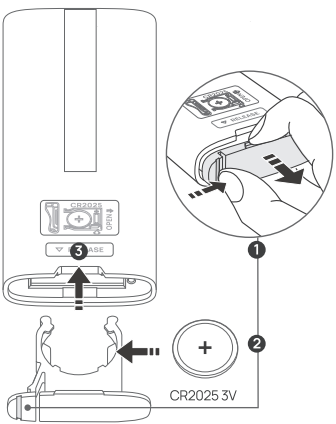

1. Keep the locking tab pressed while pulling out the battery holder from the slot at the back.
2. Replace with the same battery type with the (+) side facing up.
3. Push in the holder until securely locked in place.

Note: If the appliance doesn't respond when using the remote control in close range please consider replacing the battery.

⚠ WARNING

- **INGESTION HAZARD:** This product contains a button cell or coin battery
- **DEATH** or serious injury can occur if ingested.
- A swallowed button cell or coin battery can cause InternalChemical **Burns** in as little as **2 hours.**
- **KEEP** new and used batteries **OUT OF REACH of CHILDREN**
- **Seek immediate medical attention** if a battery is suspected to be swallowed or inserted inside any part of the body.



a) Remove and immediately recycle or dispose of used batteries according to local regulations and keep away from children. Do NOT dispose of batteries in household trash or incinerate.
b) Even used batteries may cause severe injury or death.
c) Call a local poison control center for treatment information.
d) Compatible battery type: CR2025.
e) Battery nominal voltage:3.0 Vdc
f) Non-rechargeable batteries are not to be recharged.
g) Do not force discharge, recharge, disassemble, heat above (rated temperature: 140 °F) or incinerate. Doing so may result in injury due to venting, leakage or explosion resulting in chemical burns.
h) Ensure the batteries are installed correctly according to polarity (+ and -).
i) Do not mix old and new batteries, different brands or types of batteries, such as alkaline, carbon-zinc, or rechargeable batteries.
j) Remove and immediately recycle or dispose of batteries from equipment not used for an extended period of time according to local regulations.
k) Always completely secure the battery compartment. If the battery compartment does not close securely, stop using the product, remove the batteries, and keep them away from children.

CLEANING AND MAINTENANCE

04

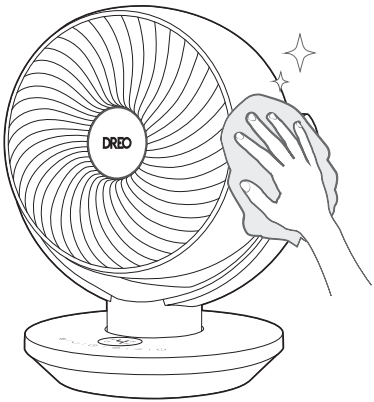

Outer Surface

Gently wipe off the dust with a soft, dry cloth.

CAUTION

1. Always unplug the air circulator before any cleaning or maintenance to avoid the risk of fire, electric shock, or injury to persons.
2. Do not immerse in water or get water inside the motor housing.
3. Do not use any chemical agents when cleaning the fan.
4. Store in a cool, dry place and cover it to protect from dust.

Front Grille and Blades

WARNING
To reduce the risk of electrical shock and injury to persons, turn off and unplug the appliance before any cleaning and maintenance.

1

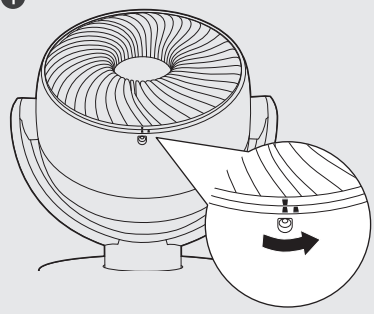

Remove the screw on the front grille, rotate the grille counterclockwise to take it off.

2

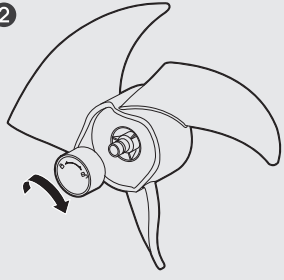

Remove the blade cap by rotating it as shown and take the blade assembly out of the shaft.

3

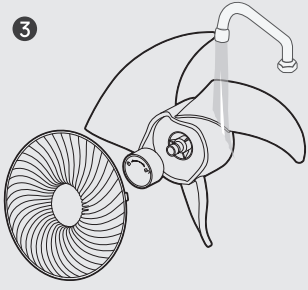

Rinse cap, blades, and grille under running water or with a clean, damp cloth.

4

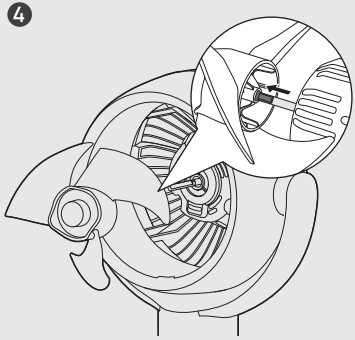

Dry up all parts, and insert the blade assembly back into the shaft by aligning the D-shaped points on the center.

5

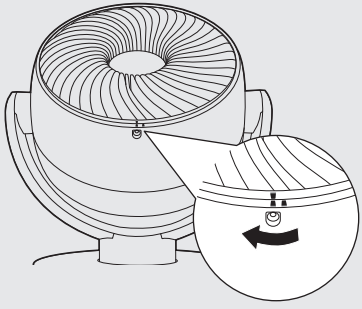

Align the point on the front grille with the right point on the casing as shown, then rotate the grille clockwise and install the screw back in place.

User Servicing Instructions (Fuse)

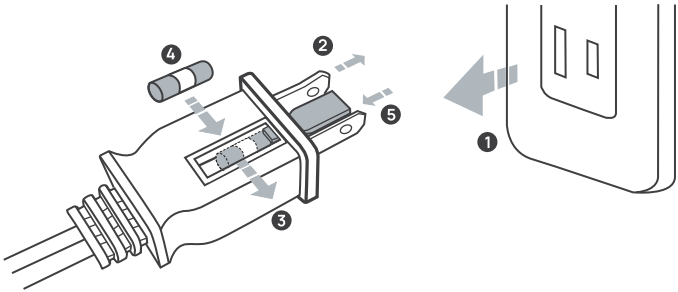

1. Grasp plug and remove from the receptacle or other outlet device. Do not unplug by pulling on cord.
2. Open fuse cover. Slide open fuse access cover on top of attachment plug towards blades.
3. Remove fuse carefully. Push the fuse from the other side to remove the fuse.
4. Risk of fire. Replace fuse only with 5 Amp, 125 Volt fuse.
5. Close fuse cover. Slide closed the fuse access cover on top of attachment plug.

WARNING

Risk of fire. Do not replace attachment plug. Contains a safety device (fuse) that should not be removed. Discard product if the attachment plug is damaged.

TROUBLESHOOTING 05

My air circulator won't turn on!

Make sure that the cord is connected to a powered outlet and the mains voltage corresponds with the voltage indicated on the air circulator.

My air circulator is shaky and wobbling!

Place the air circulator on a flat, level surface.

My air circulator is making vibration and noise!

1. Place the air circulator on a flat, level surface.
2. Be sure not to insert anything into the air inlet and outlet.
3. It is normal that the fan makes a little noise when manually adjusting the fan head.

If your problem is not listed or still persists, please contact our Customer Support **(see page 18)**

DREO CUSTOMER CARE

06

Default 12-Month Warranty

This appliance is covered by Dreo warranty for 12 months from the date of its original purchase.

Extend Your Warranty

Extend your warranty by registering your new appliance on our website **https://dreo.com/warranty.**

The warranty will not apply in cases of:

1. Accident, misuse, or repairs performed by unauthorized personnel.
2. Any unit that has been tampered with or used for commercial purposes.
3. Normal wear and tear of wearable parts.
4. Use of force, damage caused by external influences.
5. Damage caused by non-observance of the User Manual, e.g. connection to an unsuitable mains supply or noncompliance with the instructions.
6. Partially or completely dismantled appliances.
7. Defects caused by or resulting from damages from shipping or from repairs, service, or alteration to the product or any of its parts that have been perform ed by a repair person not authorized by Dreo.

We can only provide after-sales service for products that are sold by Dreo or Dreo authorized retailers and distributors. If you have purchased the appliance from a different place, please contact your seller for return and warranty issues.

FCC Statement

This device complies with Part 15 of the FCC Rules.Operation is subject to the following two conditions: (1) this device may not cause harmful interference, and (2) this device must accept any interference received, including interference that may cause undesired operation.

Please note that changes or modifications of this product is not expressly approved by the party responsible for compliance could void the user's authority to operate the equipment.

NOTE: This equipment has been tested and found to comply with the limits for a Class B digital device, pursuant to Part 15 of the FCC Rules. These limits are designed to provide reasonable protection against harmful interference in a residential installation. This equipment generates, uses and can radiate radio frequency energy and, if not installed and used in accordance with the instructions, may cause harmful interference to radio communications. However, there is no guarantee that interference will not occur in a particular installation. If this equipment does cause harmful interference to radio or television reception, which can be determined by turning the equipment off and on, the user is encouraged to try to correct the interference by one or more of the following measures:

-Reorient or relocate the receiving antenna.

-Increase the separation between the equipment and receiver.

-Connect the equipment into an outlet on a circuit different from that to which the receiver is connected.

-Consult the dealer or an experienced radio/TV technician for help.

Model No.: DR-HAF005
Rev_1.1_EN

(888) 290-1688 Mon - Fri, 9:00 am-5:00 pm PST/PDT
support@dreo.com
www.dreo.com
Shenzhen Hesung Innovation Technology Co., LTD
26F, Bldg A7, Creative City, Shenzhen, China

MADE IN CHINA

Intertek
5019464