DREO | Tower Fan
518

USER MANUAL

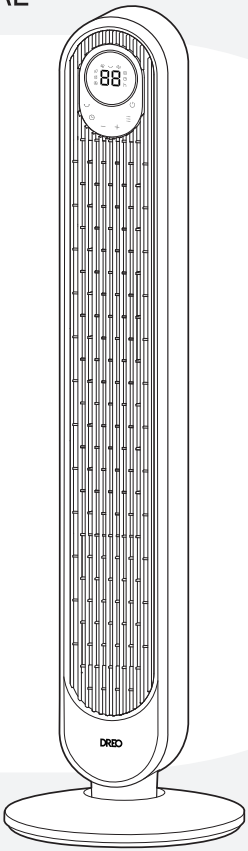

Thanks for Choosing DREO!

Your support means the world to us.
We hope you enjoy our product as much as we did creating it.

CONTENTS

01

IMPORTANT SAFETY INSTRUCTIONS

1-3

02

ASSEMBLING YOUR TOWER FAN

4-6

03

KNOWING YOUR TOWER FAN

7-8

04

USING YOUR TOWER FAN

9-11

05

CLEANING AND MAINTENANCE

12-14

06

TROUBLESHOOTING

15

07

DREO CUSTOMER CARE

16-18

IMPORTANT SAFETY INSTRUCTIONS 01

READ ALL CAUTIONARY MARKINGS ON THE APPLIANCE AND SAFETY INSTRUCTIONS IN THE USER MANUAL BEFORE USE.

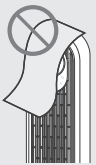

Do not cover the air inlet and outlet while in operation.



Do not use the fan near flammables and combustibles.

General Safety

1. Children shall not play with the appliance. Cleaning and maintenance shall not be performed by children without supervision.
2. Use the appliance as described in the user manual only. Any other use not recommended in the user manual may cause fire, electrical shock, or personal injury.
3. This appliance can be used by children aged above 8 years and persons with reduced physical, sensory or mental capabilities or lack of experience and knowledge if they have been given supervision or instruction concerning use of this appliance in a safe way and understand the hazards involved.

Operation Safety

1. Place the appliance on a flat, dry surface before use.
2. Do not immerse in water and any other liquids.
3. Do not use the appliance until the base is installed.
4. Do not insert your fingers, pencil, and any other objects into the grilles while in operation.
5. Do not dismantle, repair, or modify. All servicing should be performed by qualified personnel.
6. Ensure that the fan is switched off from the supply mains before removing the guard.

Electricity Safety

1. Make sure that the voltage of your electricity supply is the same as that indicated on the appliance.
2. Always unplug before cleaning or leaving the appliance unused for a long period of time. Keep your hands dry when plugging/unplugging.
3. Do not operate any fan with a damaged cord or plug. Discard fan or return to an authorized service facility for examination and/or repair.
4. Do not run cord under carpeting. Do not cover cord with throw rugs, runners, or similar coverings. Do not route cord under furniture or appliances. Arrange cord away from traffic area and where it will not be tripped over.
5. **WARNING:** To reduce the risk of fire or electric shock, do not use this Fan with any solid-state speed control device.
6. **WARNING:** To reduce the risk of fire, electric shock or injury to persons, do not use replacement parts that have not been recommended by the manufacturer (e.g. parts made at home using a 3D printer).
7. **WARNING:** If the supply cord is damaged, it must be replaced by the manufacturer, its services agent or similarly qualified persons in order to avoid a hazard.
8. The appliance shall not be modified by users, such as by adding supplemental filters to the appliance.

FOR HOUSEHOLD USE ONLY
READ AND SAVE THESE INSTRUCTIONS

Gentle Reminder:



Check the appliance regularly and refer to TROUBLESHOOTING or contact our customer support if it shows any of the following signs:

- Power cord or plug is damaged.
- Loud noise, unusual smell or excessive heat.

Specifications

Model No.	DR-HTF018
Input	AC 220-240V 50Hz
Rated Power	35W
Battery Type	AAA



Correct Disposal of this product

This marking indicates that this product should not be disposed of with other household waste throughout the EU. To prevent possible harm to the environment or human health from uncontrolled waste disposal, recycle it responsibly to promote the sustainable reuse of material resources. To return your used device, please use the return and collection system or contact the retailer where the product was purchased. They can take this product for environmentally safe recycling.

ASSEMBLING YOUR TOWER FAN

02

Assembly Instructions

When using the appliance for the first time, remove the wraps and attach the parts by following the steps below.

1

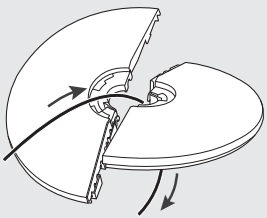

Run the cord through the center hole of the two base halves.

2

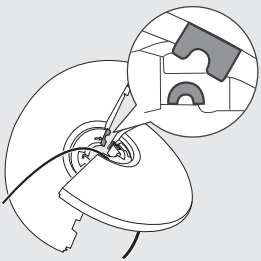

Intersect the two base halves diagonally. Match the arched cutout with the arched support on the base. Then, hook them together.

3

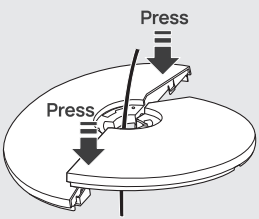

Press down on the edge until you hear a **click** to securely snap the two base halves together.

4

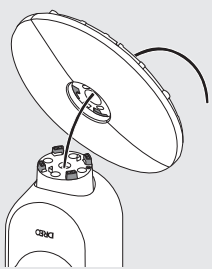

Attach the base to the fan bottom.

❺

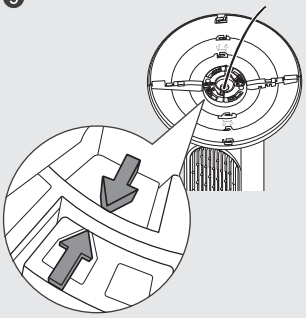

Make sure the arrows on both the base and fan bottom are aligned.

❻

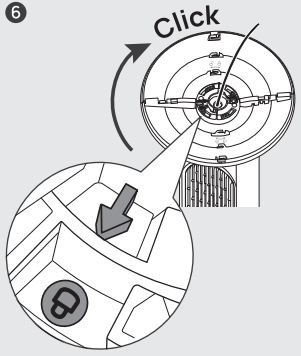

Turn the base clockwise until it **clicks** into place.

❼

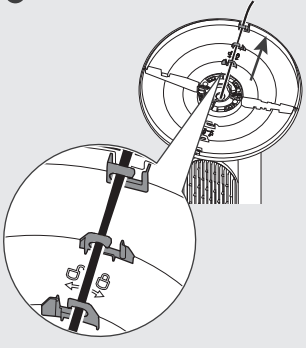

Thread the cord through all REAR cord keepers, then set the fan upright.

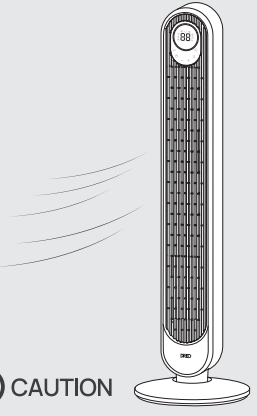

CAUTION

- Do not operate the tower fan if the base has not been installed.
- Make sure to thread the cord through all rear cord keepers.

Package Contents

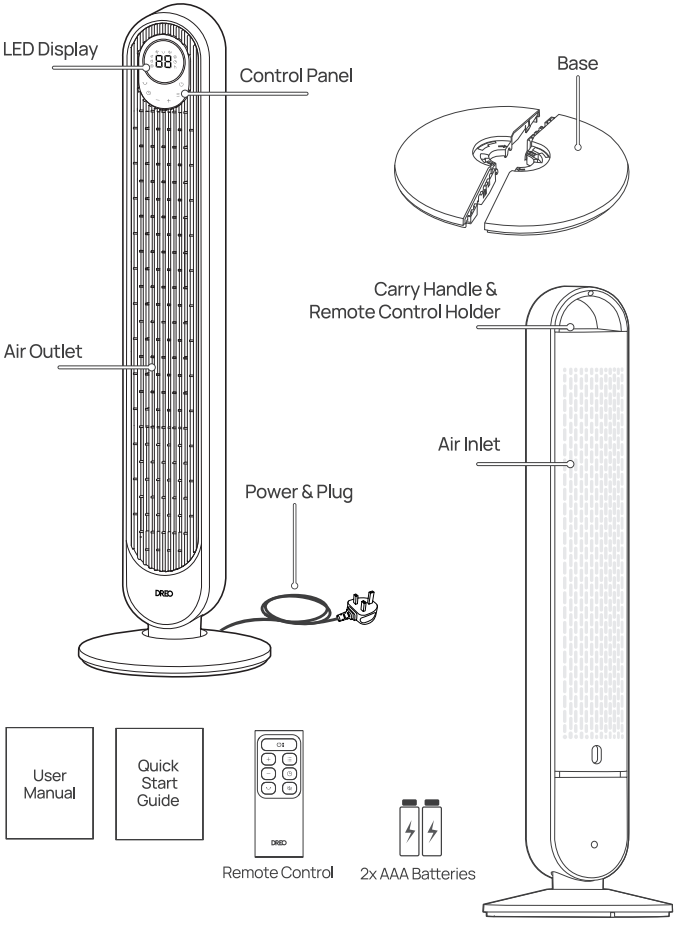

KNOWING YOUR TOWER FAN

03

Control Panel

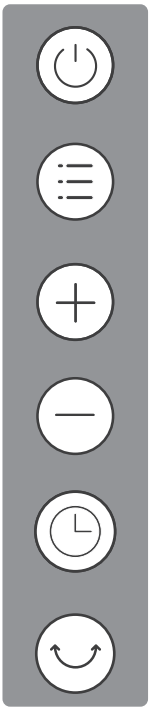

Power Button
Turn power on/off

Mode Button
- Switch between Normal/Natural/Sleep/Auto Mode
- Long press for 3 seconds to mute/unmute

Increase Button
(1-9 speed levels)

Decrease Button
(1-9 speed levels)

Timer Button
Select to set a timer (0-12h)

Oscillation Button
Adjust airflow direction

LED Display

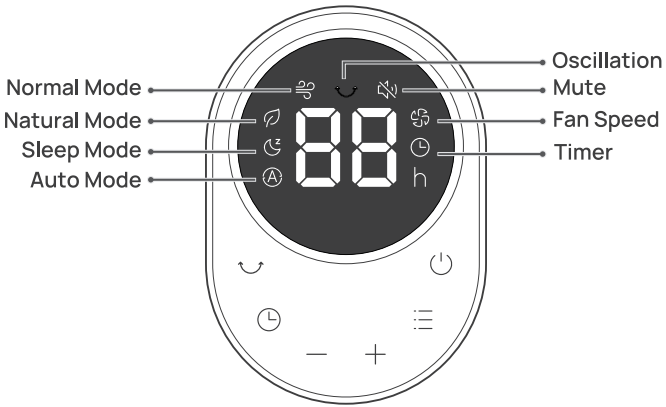
Normal Mode
Natural Mode
Sleep Mode
Auto Mode
Oscillation
Mute
Fan Speed
Timer

USING YOUR TOWER FAN

04

Working Modes

Normal Mode
Fan runs at the fixed speed.

Natural Mode
Fan speed goes up and down intermittently to replicate the natural breeze.

Auto Mode
Fan automatically increases speed when room temp is higher and decreases speed when temp is lower.

Sleep Mode
(Mute Auto On)

Balance comfort and noise by automatically decreasing fan speed as you fall sleep.

If the fan speed is higher than 3, it will decrease two times, one speed every 30 minutes, then it will remain constant.

If the fan speed is 3 or below it will remain constant.

Additional Features

Mute
Long press or press on the remote control to turn on/off the button sounds.

Timer
When the fan is ON/OFF, touch the timer button repeatedly to set a timer (1-12 h). When the timer ends, the fan will stop/start running automatically. To cancel, set the time to 0 hour.

Note: Display will return to fan speed after 3 seconds.

Memory

If the fan is turned OFF or disconnected from power, it will operate under the previous settings (except the timer setting) when it is turned ON again.

Display Auto Off

- Display turns off after 1 minute (after 5 seconds in sleep mode).
- Wake up the display with any button.

Getting the Most out of Your Tower Fan

1. Remove any tall obstacles that might block the airflow from the fan.

2. Combine with your AC unit to get cooler air throughout the room.

3. Position the tower fan closer to you to get more direct airflow.

4. Place a bucket of ice in front of the fan for an extra cooling boost.

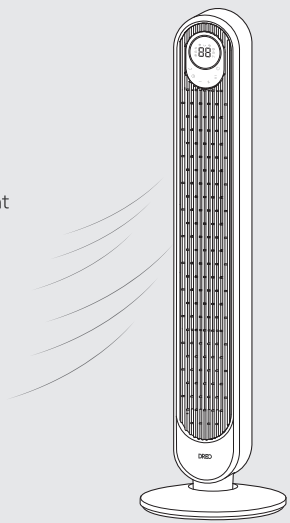

Remote Control

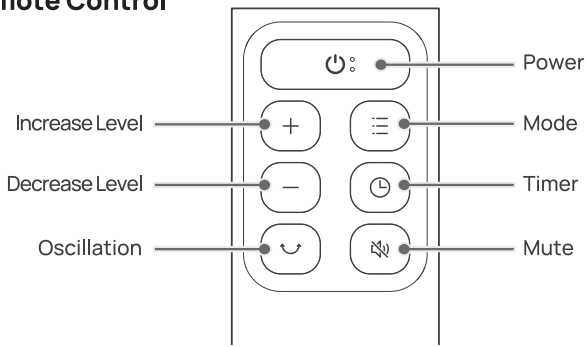

Battery Replacement

1. Remove the battery cover in the direction indicated by the arrow.
2. Replace with two new AAA 1.5V batteries. Make sure that the positive(+) and negative(-) terminals are positioned correctly.
3. Push the battery cover back into place.

⚠ WARNING

· Replace with new batteries of the same type when replacement is required.

· Remove the batteries when the remote control is unused for long period of time.

· Do not attempt to dismantle the batteries.

· Do not dispose the batteries in fire, batteries may explode or leak.

· Chemical burn hazard. Keep batteries away from children.

· Do not mix old and new batteries and Do not mix alkaline, standard (carbon-zinc) or rechargeable (ni-cad, ni-mh, etc.) batteries.

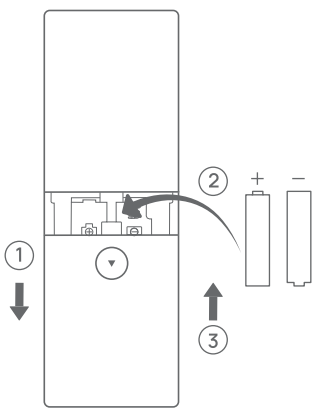

CLEANING AND MAINTENANCE

05

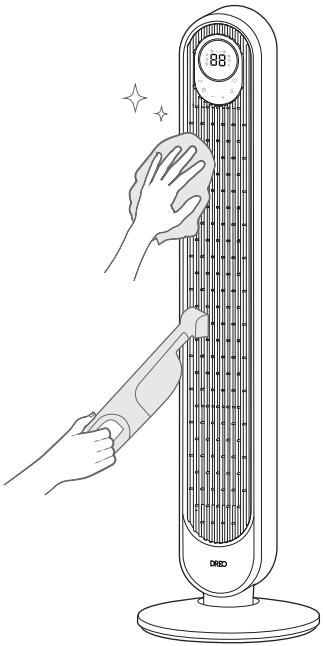

Outer Surface

Gently wipe off the dust with a soft, dry cloth.

Grilles & Blades

Remove the dust using a vacuum or air duster.

Base

The base can be disassembled in the reverse order of assembly.

CAUTION

1. Always unplug the fan before any cleaning or maintenance.
2. Do not immerse in water or get water inside the motor housing.
3. Do not use any chemical agents when cleaning the fan.
4. Store in a cool, dry place and cover it to protect from dust.

Rear Grille

WARNING
Turn off the appliance and unplug before any cleaning and maintenance.

1

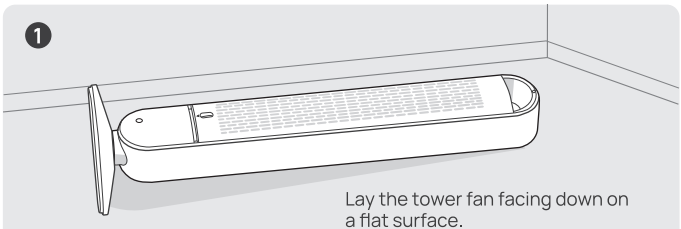

Lay the tower fan facing down on a flat surface.

2

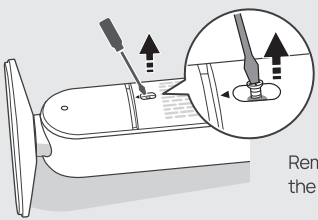

Remove the screw at the bottom of the rear grille with a Phillips screwdriver.

3

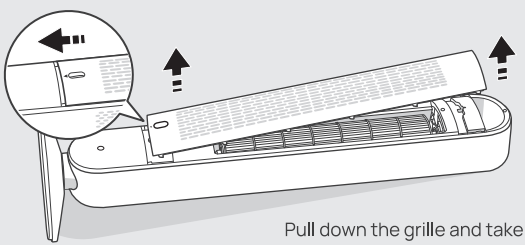

Pull down the grille and take it out.

4



Clean the dust on blades using a vacuum cleaner or air duster. Rinse the rear grille under running water with a clean, damp cloth.

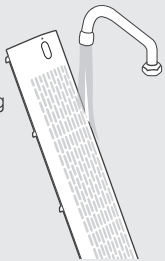

5

Dry up, then install the grille and the screw back by following the reverse order of disassembly.

TROUBLESHOOTING 06

My fan won't turn on!

Make sure that the cord is connected to a powered outlet and the mains voltage corresponds with the voltage indicated on the fan.

My fan is shaky and wobbling!

1. Place the fan on a flat, level surface.
2. Incorrect installation might also cause shakiness. Please refer to the assembly instructions in **page 4-5**.Note that the power cord must be run through all rear keepers.

My fan is making vibration and noise!

1. Place the fan on a flat, level surface.
2. Be sure not to insert anything into the air inlet and outlet.

If your problem is not listed or still persists, please contact our Customer Support (see page 18).

DREO CUSTOMER CARE

07

24-MONTH LIMITED WARRANTY

What is Covered

DREO warrants to you that your product will be free from original defects in materials and workmanship for a period of twenty four (24) months from the date of your purchase, when you use your product for intended purposes in accordance with this User Manual.

Please retain your proof of purchase. If you do not retain your proof of purchase, your warranty will start two (2) months from the date of manufacture printed on your product label.

What is Not Covered

This limited warranty only applies to the original purchaser of your product and is non-transferable. This warranty is only valid if your product is used in the country in which you originally purchased it. In addition, this warranty will not apply, and DREO will not be liable for any costs, damages, or repairs, in connection with any of the following:

- Accidents or use of your product with inappropriate force;
- Damage or destruction caused by wrong voltage or unstable electric current;
- Normal wear and tear;
- Careless operation or handling, misuse, abuse, neglect, and/or failure to maintain or use your product in accordance with this User Manual;
- Any partially or completely altered, modified and/or dismantled products;
- Reduction in battery discharge time due to battery age or use (as applicable);
- Products with altered or removed serial numbers;
- Clearing any blockages from the product;
- Purchases from retailers and distributors not authorized by DREO to sell this product;
- Defects caused by or resulting from damages from shipping or handling by any third party not authorized by DREO to ship or handle your product; or
- Defects caused by or resulting from repairs, service, improper maintenance, or alteration to your product or any of its components by anyone other than a repair person authorized by DREO.

Any service and customer support that DREO provides to you under this limited warranty will not extend the duration of this limited warranty.

Warranty Limitations and Exclusions

ANY IMPLIED WARRANTIES RELATING TO YOUR PRODUCT, INCLUDING BUT NOT LIMITED TO THE WARRANTY OF MERCHANTABILITY AND THE WARRANTY OF FITNESS FOR A PARTICULAR PURPOSE, ARE LIMITED TO THE DURATION OF THE LIMITED WARRANTY SET FORTH ABOVE AND ARE OTHERWISE DISCLAIMED.

THIS LIMITED WARRANTY SHALL BE THE SOLE REMEDY OF THE PURCHASER OR USER OF THE PRODUCT, AND DREO SHALL NOT BE LIABLE FOR AN ALLEGEDLY DEFECTIVE OR DAMAGED PRODUCT EXCEPT TO REPAIR OR REPLACE IT IN ACCORDANCE WITH THIS LIMITED WARRANTY. DREO WILL NOT BE LIABLE FOR SPECIAL, INCIDENTAL, INDIRECT, CONTINGENT, OR CONSEQUENTIAL DAMAGES OR LOSSES OF ANY NATURE THAT YOU MAY INCUR IN CONNECTION WITH YOUR PURCHASE OR USE OF YOUR PRODUCT.

Some jurisdictions do not allow limitations on how long an implied warranty lasts or the exclusion or limitation of incidental or consequential damages, so the above limitations or exclusions may not apply to you. This limited warranty gives you specific legal rights, and you also may have other rights which vary from jurisdiction to jurisdiction.

Limited Remedies

If your product fails because of an original defect in material and/or workmanship during the warranty period, DREO will repair or replace (in DREO's sole discretion) your product.

To obtain warranty service on your product, contact us at uk-support@dreo.com for further instructions.

IN THE EVENT OF AN ORIGINAL DEFECT IN MATERIAL AND/OR WORKMANSHIP, TO THE EXTENT PERMITTED BY LAW, THE REMEDIES SET FORTH IMMEDIATELY ABOVE ARE YOUR SOLE AND EXCLUSIVE REMEDIES.

Model No.: DR-HTF018
Rev_1.3_UK

We're Here to Help!

uk-support@dreo.com

www.dreo.com



www.dreo.com

Looking for help?

Contact us to get expert support.

uk-support@dreo.com www.dreo.com